<u>Temperature Control Lab</u>

Paolo Petrarca, Mechanical Engineering Student, 8/13/2025

Objective

The goal of the project was to gain hands-on experience in control systems engineering using software and hardware. Focused on learning hardware-in-the-loop testing, system modeling, and PID control theory. I worked with a pre-built Arduino with a thermocouple and heater to have a closed-loop temperature control system. MATLAB and Simulink were used to model the systems dynamics, tune the PID controller, and deploy algorithms directly to the Arduino hardware. Through this project, I developed practical skills in embedded systems and control design.

Hardware

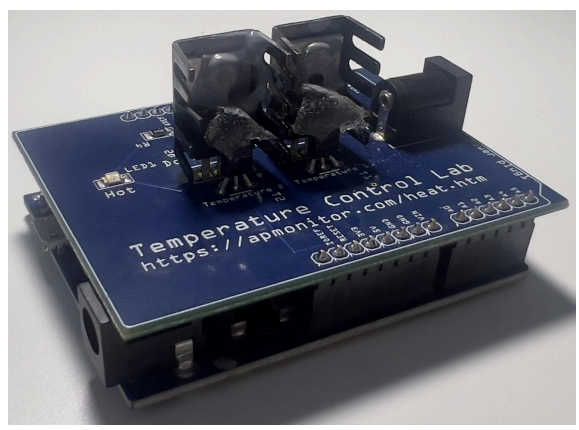

PID Controller Configuration

PID parameters were determined by using a combination of experimental tuning and step-response analysis:
P = 5: Set to achieve control without oscillating
I = 0.05: To eliminate steady-state error
D = 10 & N = 0.01: To reduce overshoot
The PID controller was deployed with Arduino and tested via hardware-in-the-loop testing to validate real-world performance.

Final System

The final system maintained the target temperature with less overshoot and stable steady-state performance, showcasing success with PID control implementation.

Final Simulink Model and Subsystem:

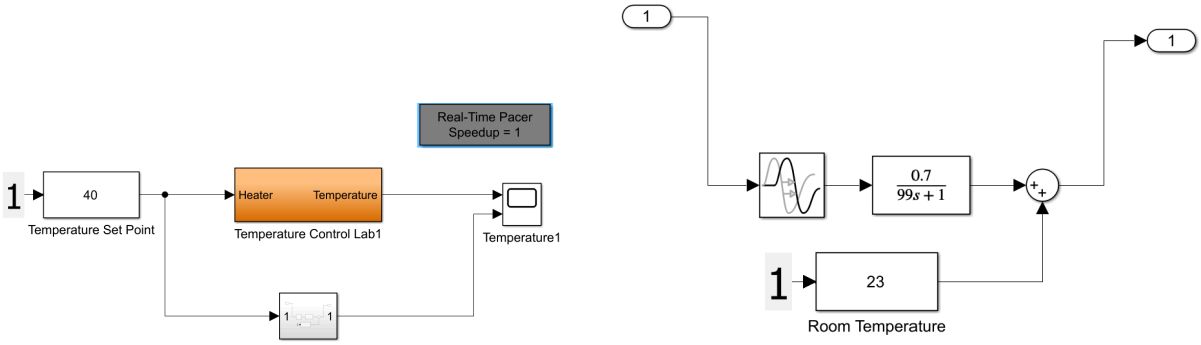

Final Graph

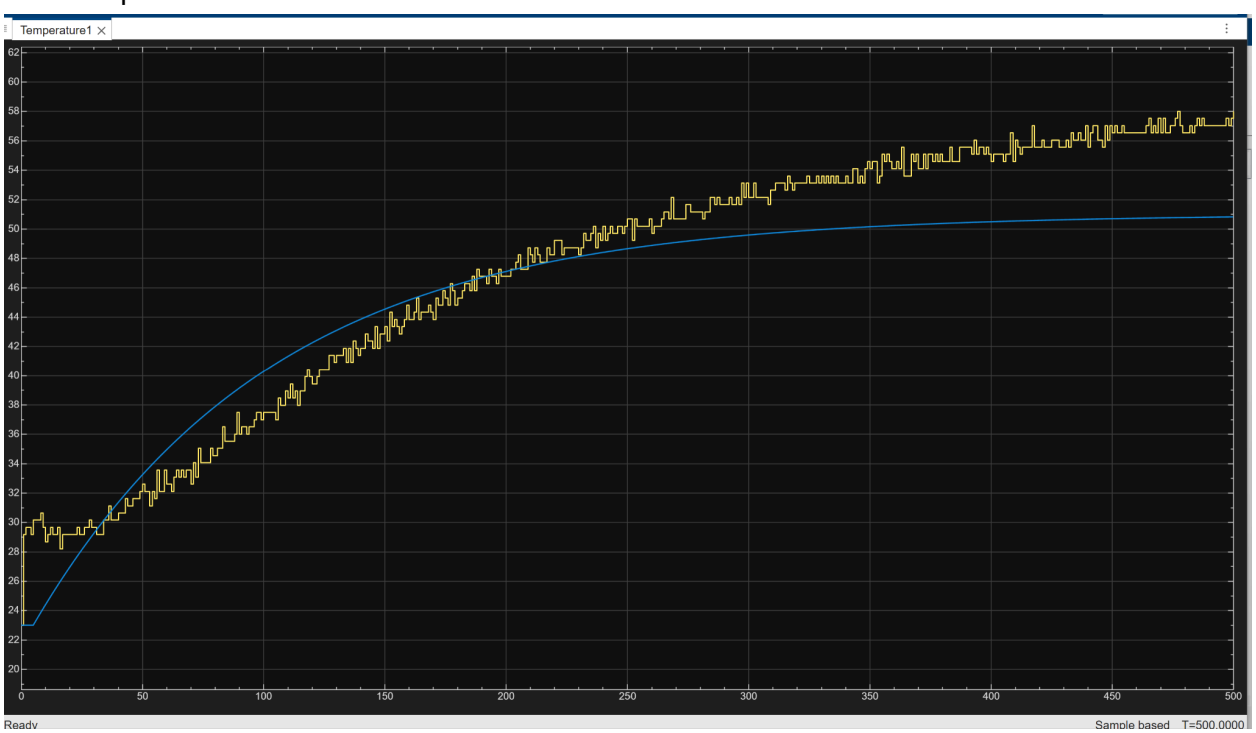

The values of the first order plus dead time transfer function, K = 0.7, T = 5, and Temp Constant = 99. With more experimentation of the transfer function values you can get closer and closer to the blue line and get the most optimal system.